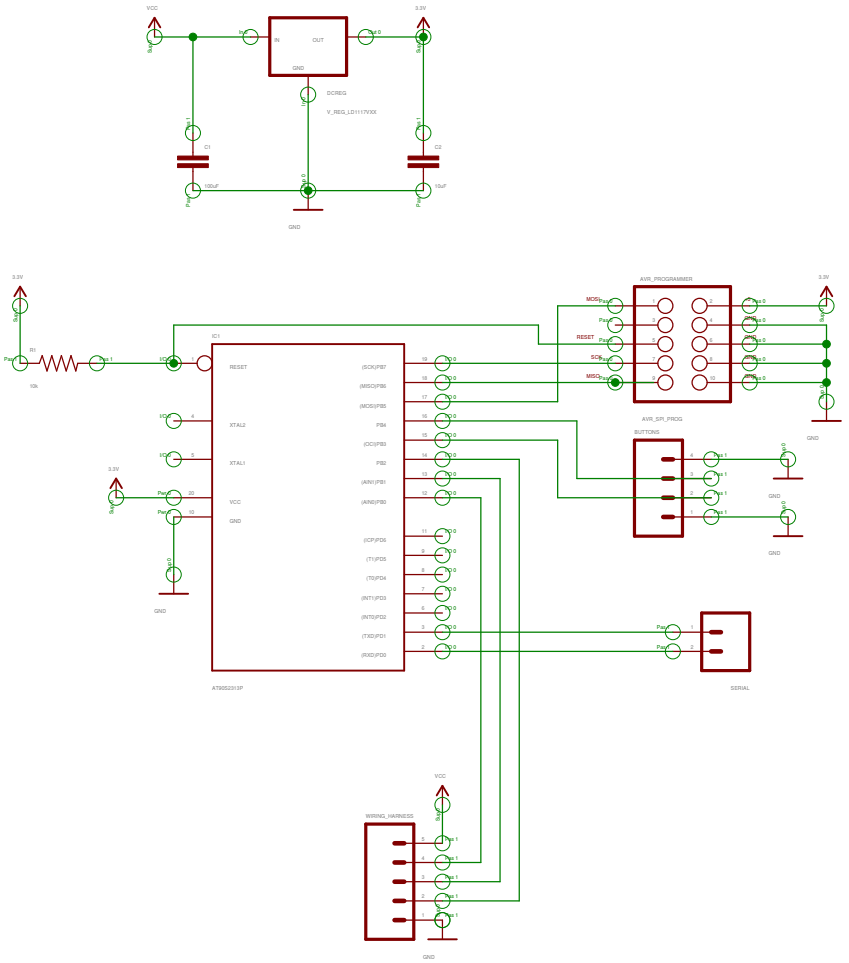
VCC
3.3V
IN
OUT
GND
DCREG
V_REG_LD1117VXX
C1
C2
100uF
10uF
GND
3.3V
R1
10k
IC1
RESET
XTAL2
XTAL1
VCC
GND
(SCK)PB7
(MISO)PB6
(MOSI)PB5
PB4
(OC)PB3
PB2
(AIN1)PB1
(AIN0)PB0
(ICP)PD6
(T1)PD5
(T0)PD4
(INT1)PD3
(INT0)PD2
(TXD)PD1
(RXD)PD0
ATS952013P
GND
AVR_PROGRAMMER
MOSI
RESET
SCK
MISO
3.3V
AVR_SPI_PROG
BUTTONS
GND
SERIAL
VCC
WIRING_HARNESS
GND